Mobile FumeKART

Fume Extraction System

Datasheet

Technical Specification and Product Information



A multi-purpose mobile dust and fume extraction system.

The Mobile FumeKART is a versatile and portable dust and fume extraction system suitable for a variety of applications. Designed to filter dust particles, weld fumes, vapors, and other pollutants from the work environment, the FumeKART is easy to operate and maintain and provides the additional benefit of being fully portable.

FEATURES

- Low noise level
- Fully portable

Approvals: UKCA and CE

TECHNICAL SPECIFICATION

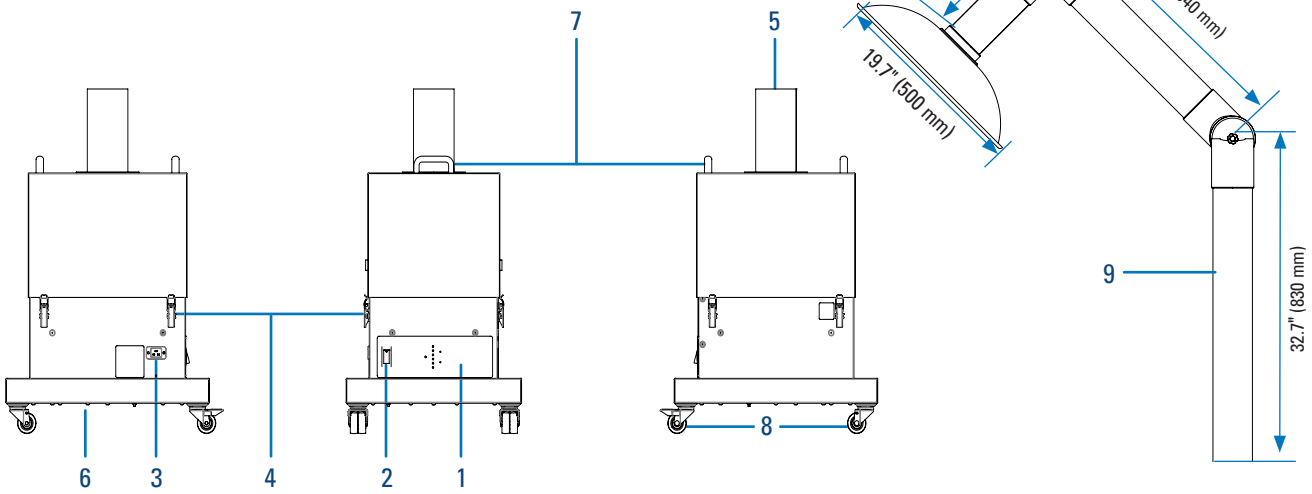

1. Control panel
2. On/off switch
3. Power cable inlet
4. Latches
5. Arm connection- 2.9/3.9" (75/100 mm)
6. Exhaust outlet
7. Handles
8. Castors
9. Extraction system arm 2.9/3.9" (75/100 mm)*

TECHNICAL DATA

Voltage	Flowrate		System dimensions (H x W x D)		Weight (+/- 5%)		Noise level**	Frequency	Full load current
V	cfm	m^3/hr	in	mm	lbs	kg	dB(A)	Hz	amps
115-230	223	380	33.1 x 18.7 x 21.7	840 x 475 x 550	119	54	< 64	50/60	12.5

ARMS AND ACCESSORIES

ARM ATTACHMENTS - 2.9" (75 mm)		
Description	Part number	Image
Clear square hood 16.5 x 12.6" (420 x 320 mm)	1UA1020384	
Aluminum round hood 7.9" (200 mm)	1UA1020344	
Aluminum suction pen 9.8" (250 mm)	1UA1060150	
Clear round hood 15.2" (385 mm)	1UA1080136	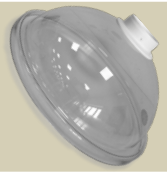

ARM ATTACHMENTS - 3.9" (100 mm)		
Description	Part number	Image
Metal round hood 3.9" (100 mm)	1UA1080146	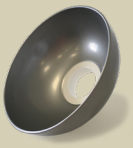
Clear round hood 19.7" (500 mm)	1UA1060152	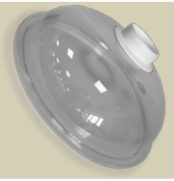

PART NUMBERS - SYSTEM

Description	Part number
Powder-coated, 115-230 V 75 mm arm, UK plug	1U351067-1127-1
Powder-coated, 115-230 V 100 mm arm, UK plug	1U351067-1127-2
Powder-coated, 115-230 V VOC, 75 mm arm, UK plug	1U8700351067-1127
Powder-coated, 115-230 V VOC, 100 mm arm, UK plug	1U8100351067-1127

AIRFLOW

Pre-filter

HEPA filter

Chemical filter

Clean filtered air

Contaminated air

Particulate

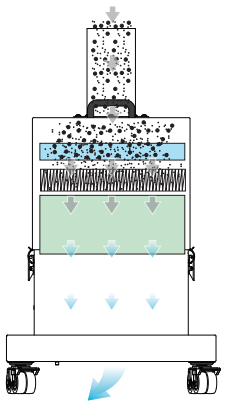

FILTER SPECIFICATIONS

Model	Surface media area (approx)		Filter efficiency
	ft²	m²	
Pre-filter	33.4	3.1	95% @ 0.9 microns
Combined filter (HEPA)	36.1	3.4	99.995% @ 0.3 microns

Model	Activated carbon volume
	ltr
Combined filter (gas)	19

PART NUMBERS - FILTERS

Pre-filter	Combined filter
1UA1030167	1UA1030166

CUSTOMIZATIONS

Options

Power cables
VOC sensor

Cabinet construction

Powder-coated mild steel (RAL9016)

Power cables

Type B
Type E
Type G

*Multiple hood options available for connection to the extraction system arm.

**Noise level: At typical operating speed.

Datasheet correct at time of publishing. Where applicable, the carbon used in Donaldson BOFA systems is capable of removing a wide range of VOCs, however it is the responsibility of the user to ensure the carbon is suitable for their application. For specific applications, please contact us for details.

Important Notice
Many factors beyond the control of Donaldson can affect the use and performance of Donaldson products in a particular application, including the conditions under which the product is used. Since these factors are uniquely within the user's knowledge and control, it is essential the user evaluate the products to determine whether the product is fit for the particular purpose and suitable for the user's application. All products, product specifications, availability and data are subject to change without notice, and may vary by region or country.

bsi. ISO 9001 Quality Management
FS 643451
ISO 9001

Approvals: REACH and RoHS. See invididual product technical data for specific accreditations.

Donaldson BOFA™

Donaldson BOFA

UK & ROW
Tel. +44 (0) 1202 699 444
Email. bofasales@donaldson.com
Web. donaldsonbofa.com

Germany
Email. bofavertrieb@donaldson.com

USA
Tel. +1 (618) 205 5007
Email. bofasalesus@donaldson.com

ENG (November 2026) Donaldson BOFA Mobile FumeKART Datasheet. ©2011-2026 Donaldson Company, Inc. Donaldson, Torit, Dalamatic, Delta P, Delta P Plus, Downflo, Dura-Life, Easy Duct, PowerCore, Synteq XP, Ultra-Web, Unimaster and the color blue are marks of Donaldson Company, Inc. All other marks belong to their respective owners.